Designed as a special version – I section of tandem pump 22A(C)...X621.../...X622...

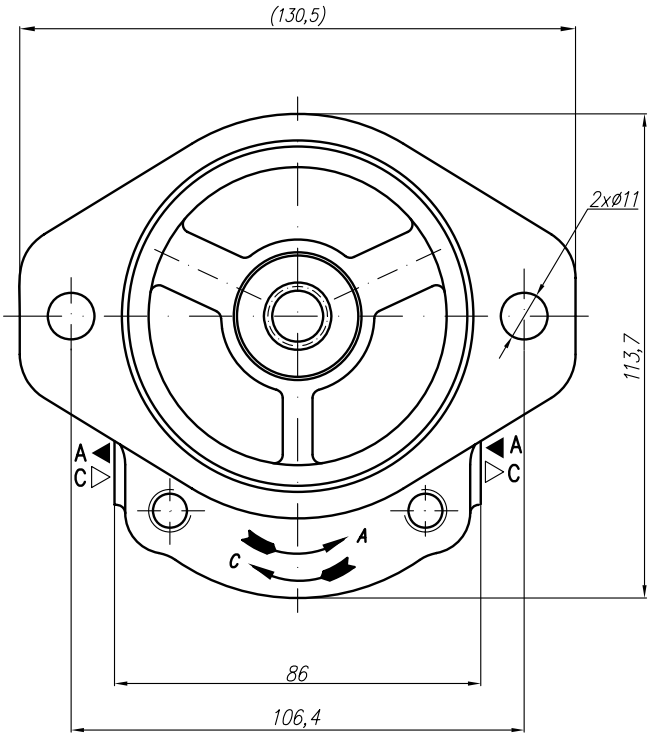

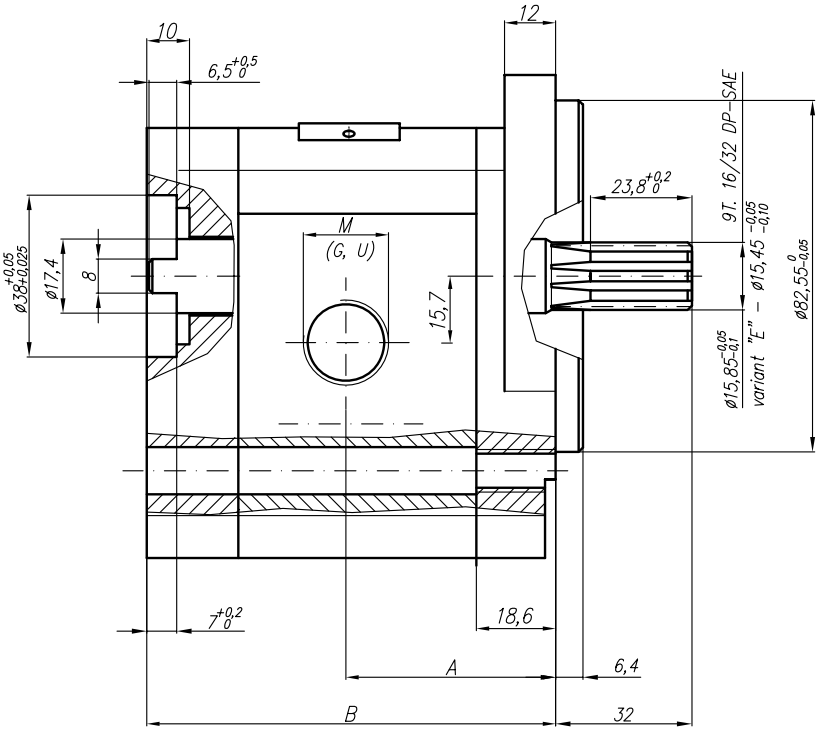

Symbol

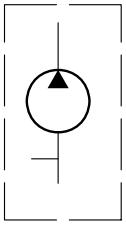

Type	Displacement	Flow		Pressure	max Speed	Dimension							
		at 1500 rpm	at max rpm	P_{nom}	n	A	B	Inlet			Outlet		
	cm^3/rev	l/min	l/min	bar	rpm	mm	mm	M	G	U	M	G	U
20A(C)4,5X621...	4,5	6,14	14,33	250	3500								
20A(C)6,3X621...	6,3	8,69	20,29	250	3500								
20A(C)8,2X621...	8,2	11,32	26,40	250	3500								
20A(C)10X621...	10	13,95	32,55	250	3500								
20A(C)11X621...	11,3	15,76	36,78	250	3500								
20A(C)12X621...	12	16,92	39,48	250	3500								
20A(C)14X621...	14	19,95	46,55	250	3500								
20A(C)15X621...	15	21,60	36,00	250	2500								
20A(C)16X621...	16	23,04	38,40	250	2500	51,6	105,3		G3/4			G1/2	
20A(C)19X621...	19	27,36	45,60	200	2500								
20A(C)22X621...	22	31,68	42,24	180	2000								
20A(C)25X621...	25	36,00	48,00	160	2000								