Designed as a first section of multiple gear pumps group 32.

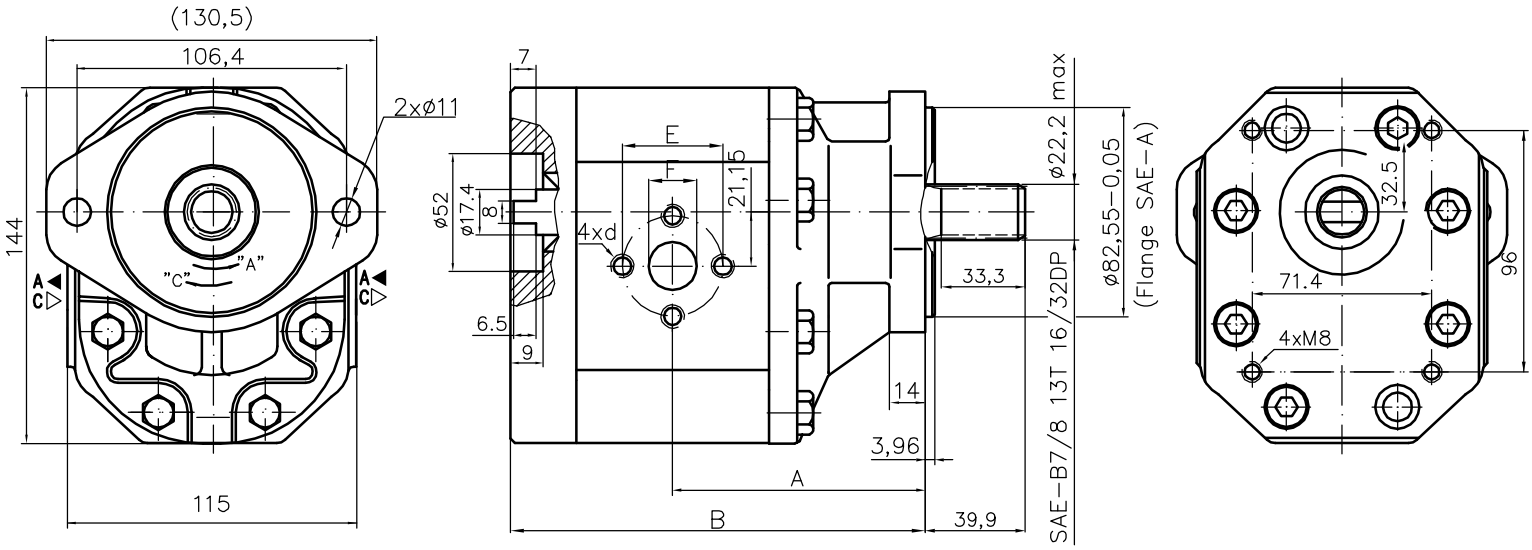

Type	Displacement	Flow		Pressure	max Speed	Dimension							
		at 1500 rpm	at max rpm	P_{nom}	n	A	B	Inlet			Outlet		
	cm^3/rev	l/min	l/min	bar	rpm	mm	mm	E	d	F	E	d	F
30A(C)32X505H	32	45,1	90,2	220	3000	105,5	174,3	51	M10	27	40	M8	19