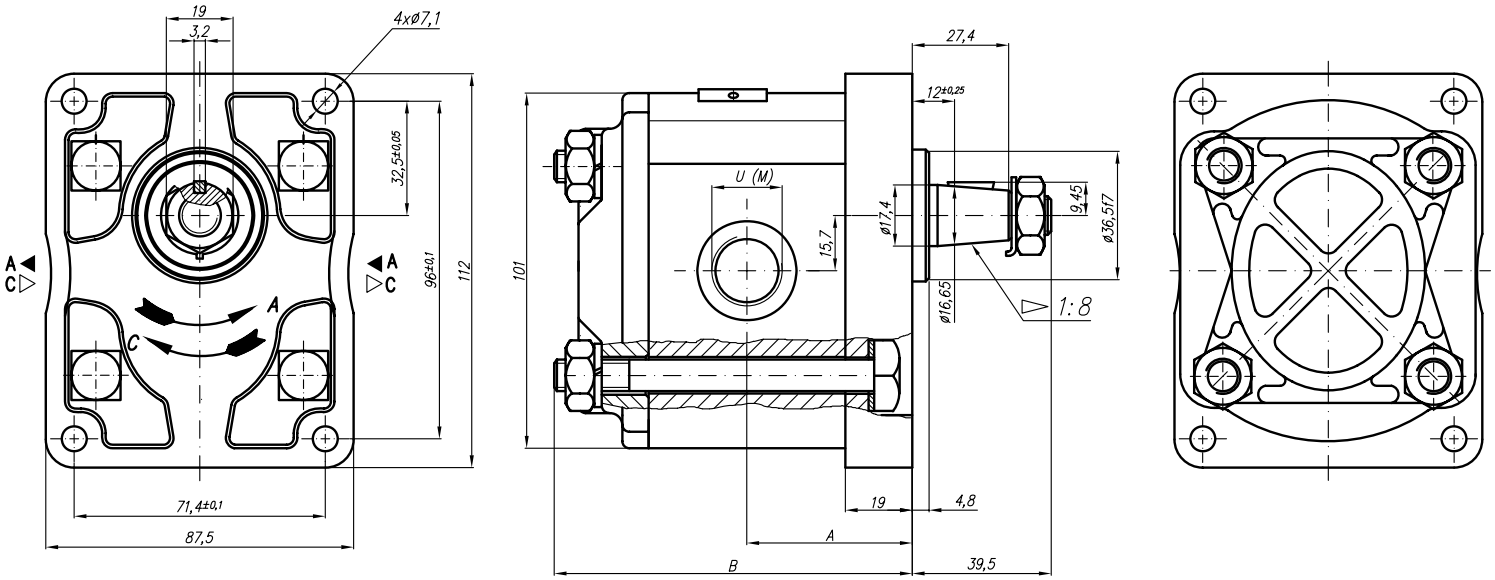


| Type | | Displacement | Flow | | Pressure | max Speed | Dimension | | | | | | | | | |
|---|---|---|---|---|---|---|---|---|---|---|---|---|---|---|---|---|
| | | | at 1500 rpm | at max rpm | $P_{nom}$ | n | A | B | Inlet | | | | Outlet | | | |
| "Caproni" | "Plessey" | $cm^3$/rev | l/min | l/min | bar | rpm | mm | mm | E | F | d | U | E | F | d | M |
| 20A(C)4,5X626UM | A(C)10XP4...SUM | 4,5 | 6,14 | 14,33 | 175 | 3500 | | | | | | | | | | |
| 20A(C)6,3X626UM | A(C)14XP4...SUM | 6,3 | 8,69 | 20,29 | 175 | 3500 | | | | | | | | | | |
| 20A(C)8,2X626UM | A(C)18XP4...SUM | 8,2 | 11,32 | 26,40 | 175 | 3500 | | | | | | | | | | |
| 20A(C)10X626UM | A(C)22XP4...SUM | 10 | 13,95 | 32,55 | 175 | 3500 | 47 | 101,8 | | | | | | | | |
| 20A(C)11X626UM | A(C)25XP4...SUM | 11,3 | 15,76 | 36,78 | 175 | 3500 | 48 | 103,9 | | | | | | | | |
| 20A(C)12X626UM | A(C)26XP4...SUM | 12 | 16,92 | 39,48 | 175 | 3500 | 48,6 | 105,1 | | | | | | | | |
| 20A(C)14X626UM | A(C)31XP4...SUM | 14 | 19,95 | 46,55 | 175 | 3500 | 50 | 108,2 | | | | 5/8"-18UNC | | | | M14x1,5 |
| 20A(C)15X626UM | A(C)33XP4...SUM | 15 | 21,60 | 36,00 | 175 | 2500 | | | | | | | | | | |
| 20A(C)16X626UM | A(C)35XP4...SUM | 16 | 23,04 | 38,40 | 175 | 2500 | | | | | | | | | | |
| 20A(C)19X626UM | A(C)42XP4...SUM | 19 | 27,36 | 45,60 | 175 | 2500 | | | | | | | | | | |
| 20A(C)22X626UM | A(C)48XP4...SUM | 22 | 31,68 | 42,24 | 175 | 2000 | | | | | | | | | | |
| 20A(C)25X626UM | A(C)55XP4...SUM | 25 | 36,00 | 48,00 | 160 | 2000 | | | | | | | | | | |