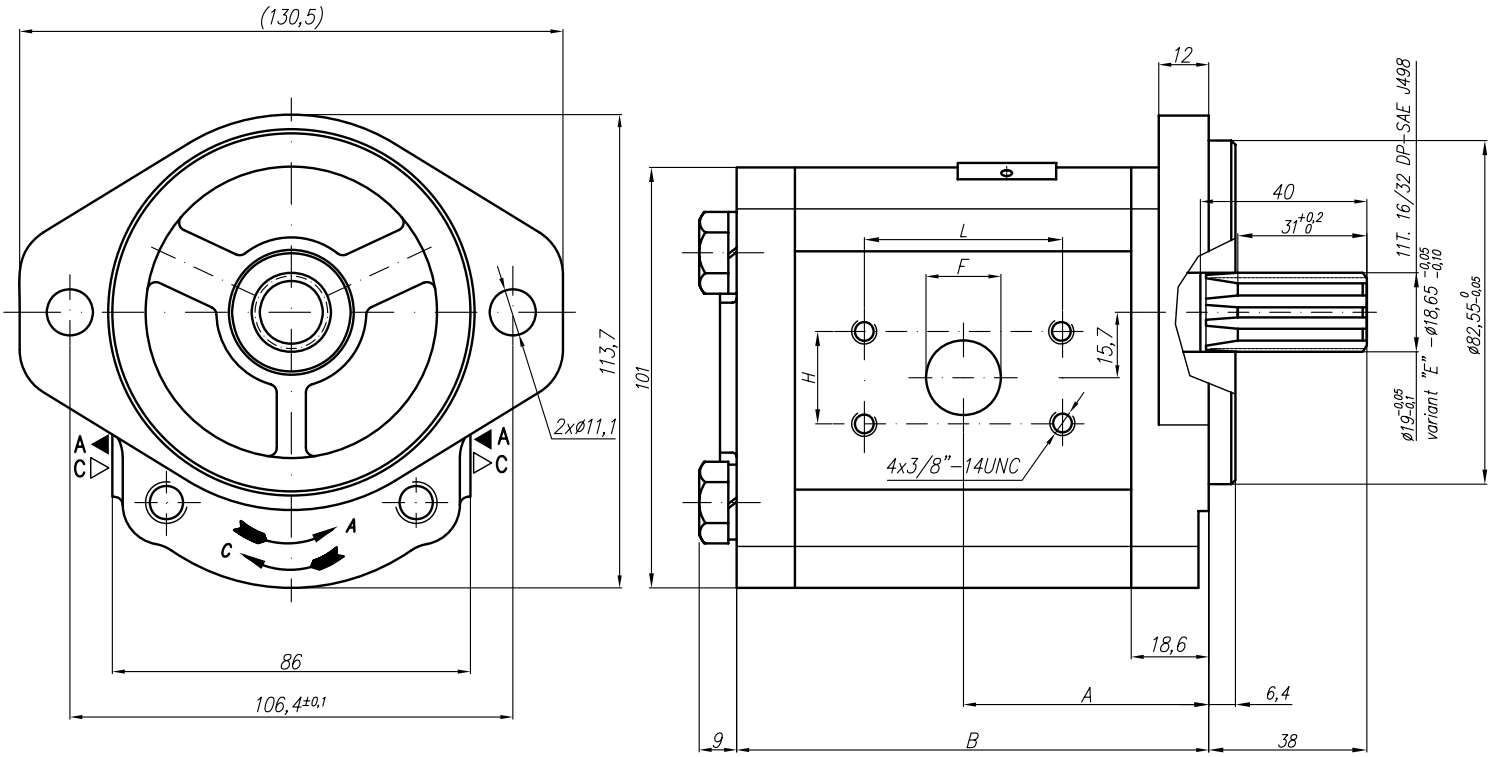

Variant "U"

SAE J475 (ISO R725)

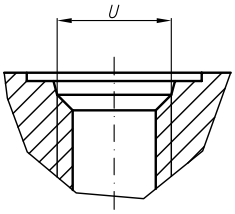

Type	Displacement	Flow		Pressure	max Speed	Dimension											
		at 1500 rpm	at max rpm	P_{nom}	n	A	B	Inlet					Outlet				
	cm^3/rev	l/min	l/min	bar	rpm	mm	mm	E	H	d	F	U	E	H	d	F	U
20A(C)15X550HD...	15	20,48	47,78	250	3500	55,6	106,8	52,7	26,2	3/8"-14UNC-2B	24	1 1/16"-12UNF	47,6	22	3/8"-14UNC-2B	17	7/8"-14UNF
20A(C)16X550HD...	16	22,08	51,52	250	3500	56,6	108,4										
20A(C)17,3X550HD..	17,3	23,87	55,71	250	3500	57,6	110,5										
20A(C)18,2X550HD..	18,2	25,39	59,24	230	3500	58,4	112,1										
20A(C)19X550HD...	19	26,51	61,85	230	3500	59	113,4										
20A(C)22X550HD...	22	31,02	72,38	200	3500	61,5	118,4										
20A(C)25X550HD...	25	35,63	83,13	200	3500	63,9	123,3										
20A(C)28X550HD...	28	40,32	67,20	170	2500	66,4	128,1					1 5/16"-12 UNF					1 1/16"-12UNF
20A(C)32X550HD...	32	46,08	76,80	150	2500	69,6	134,4										
20A(C)36X550HD...	36	51,84	86,40	120	2500	72,8	141										