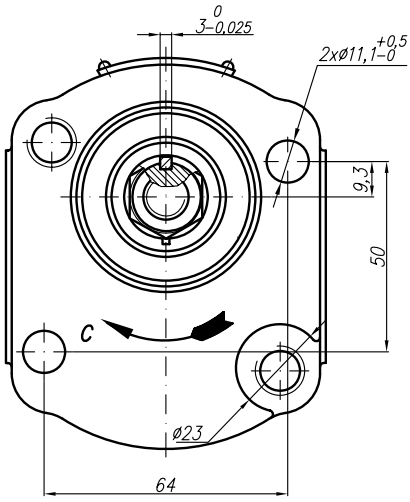

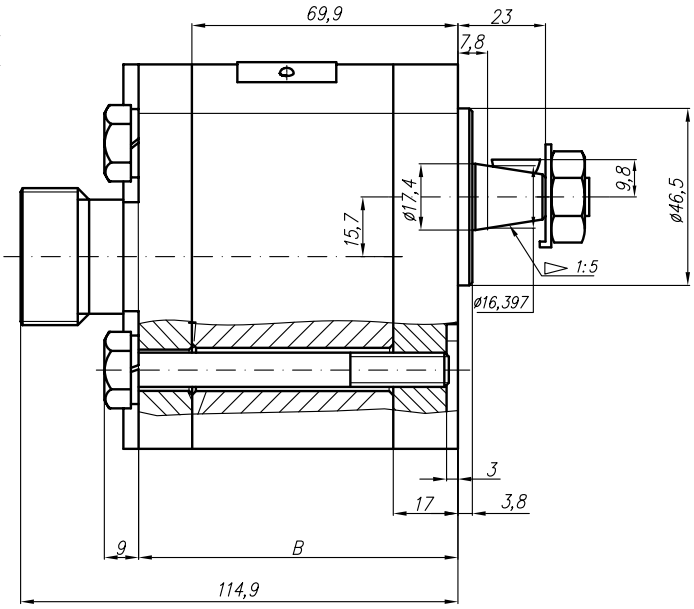

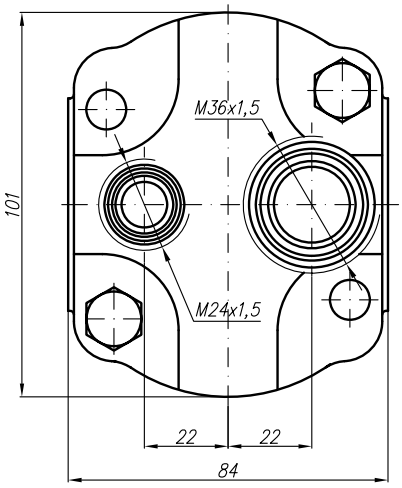

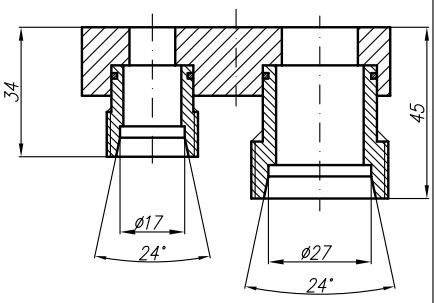

Type	Displacement	Flow		Pressure	max Speed	Dimension							
		at 1500 rpm	at max rpm	P_{nom}	n	A	B	Inlet			Outlet		
	cm^3/rev	l/min	l/min	bar	rpm	mm	mm	M	G	U	M	G	U
20C4,5X540WMS-2	4,5	6,14	14,33	250	3500			M36x1,5			M24x1,5		
20C6,3X540WMS-2	6,3	8,69	20,29	250	3500								
20C8,2X540WMS-2	8,2	11,32	26,40	250	3500		83,9						
20C10X540WMS-2	10	13,95	32,55	250	3500								
20C11X540WMS-2	11,3	15,76	36,78	250	3500								
20C12X540WMS-2	12	16,92	39,48	250	3500								
20C14X540WMS-2	14	19,95	46,55	250	3500								
20C15X540WMS-2	15	21,60	36,00	250	2500								
20C16X540WMS-2	16	23,04	38,40	250	2500								
20C19X540WMS-2	19	27,36	45,60	200	2500								
20C22X540WMS-2	22	31,68	42,24	180	2000								
20C25X540WMS-2	25	36,00	48,00	160	2000								