Designed as a I section of tandem pump 22A(C)...X539/...X538.

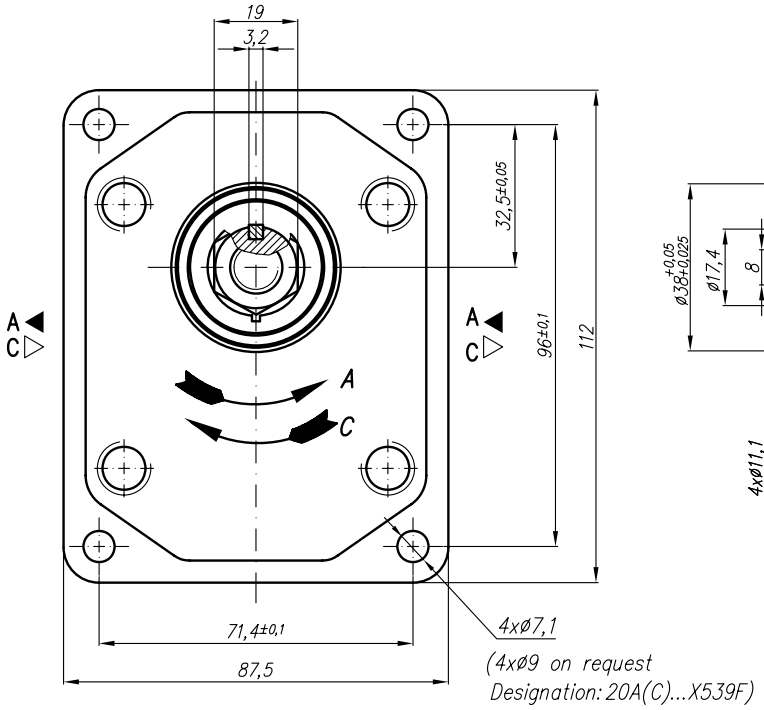

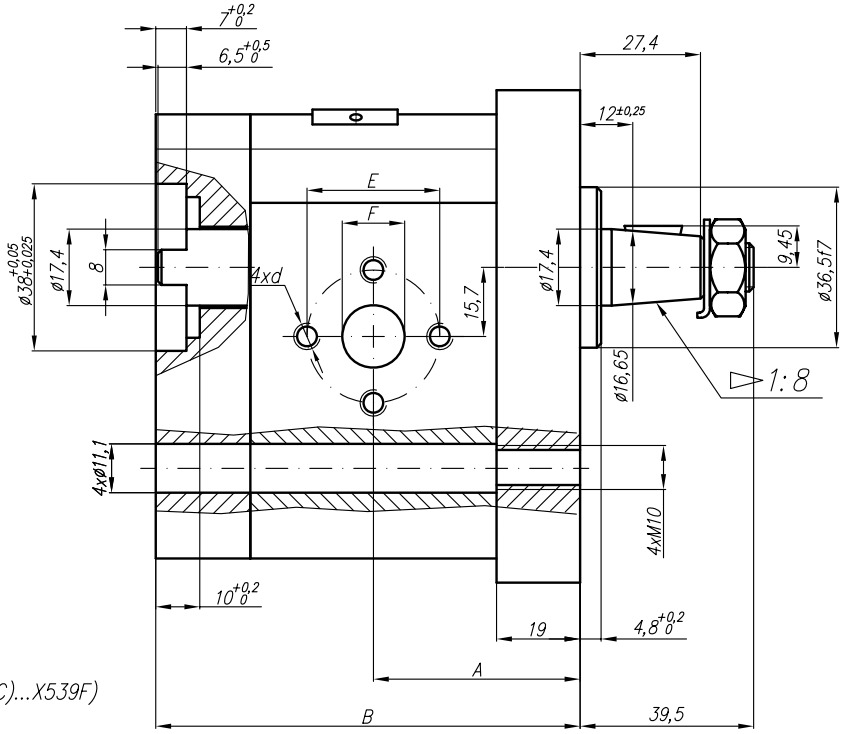

Symbol

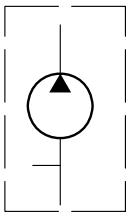

Type	Displacement	Flow		Pressure	max Speed	Dimension							
		at 1500 rpm	at max rpm	P_{nom}	n	A	B	Inlet			Outlet		
	cm^3/rev	l/min	l/min	bar	rpm	mm	mm	E	F	d	E	F	d
20A(C)4,5X539	4,5	6,14	14,33	200	3500						30		1/4"-20UNC
20A(C)6,3X539	6,3	8,69	20,29	200	3500								
20A(C)8,2X539	8,2	11,32	26,40	200	3500								
20A(C)10X539	10	13,95	32,55	200	3500			40	19	5/16"-18UNC		14	
20A(C)11X539	11,3	15,76	36,78	200	3500								
20A(C)12X539	12	16,92	39,48	200	3500								
20A(C)14X539	14	19,95	46,55	200	3500								
20A(C)15X539	15	21,60	36,00	200	2500								
20A(C)16X539	16	23,04	38,40	200	2500								
20A(C)19X539	19	27,36	45,60	200	2500	48,2	110,7						
20A(C)22X539	22	31,68	42,24	180	2000								
20A(C)25X539	25	36,00	48,00	160	2000								