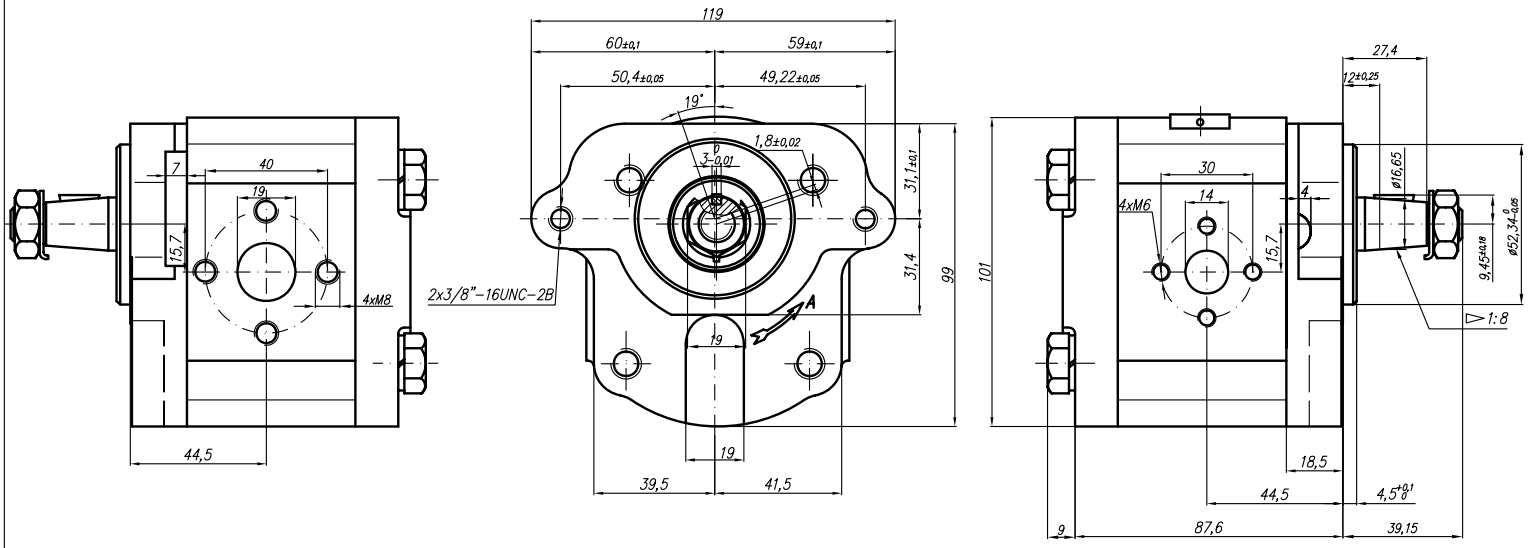

Type	Displacement	Flow		Pressure	max Speed	Dimension							
		at 1500 rpm	at max rpm	P_{nom}	n	A	B	Inlet			Outlet		
	cm^3/rev	l/min	l/min	bar	rpm	mm	mm	E	F	d	E	F	d
20A(C)4,5X525	4,5	6,14	14,33	250	3500								
20A(C)6,3X525	6,3	8,69	20,29	250	3500								
20A(C)8,2X525	8,2	11,32	26,40	250	3500								
20A(C)10X525	10	13,95	32,55	250	3500								
20A(C)11X525	11,3	15,76	36,78	250	3500	44,5	87,6						
20A(C)12X525	12	16,92	39,48	250	3500								
20A(C)14X525	14	19,95	46,55	250	3500								
20A(C)15X525	15	21,60	36,00	250	2500			40	19	M8-6H	30	14	M6-6H
20A(C)16X525	16	23,04	38,40	250	2500								
20A(C)19X525	19	27,36	45,60	200	2500								
20A(C)22X525	22	31,68	42,24	180	2000								
20A(C)25X525	25	36,00	48,00	160	2000								