Designed as a special version – II section of tandem pump 22A(C)...X380/...X381.

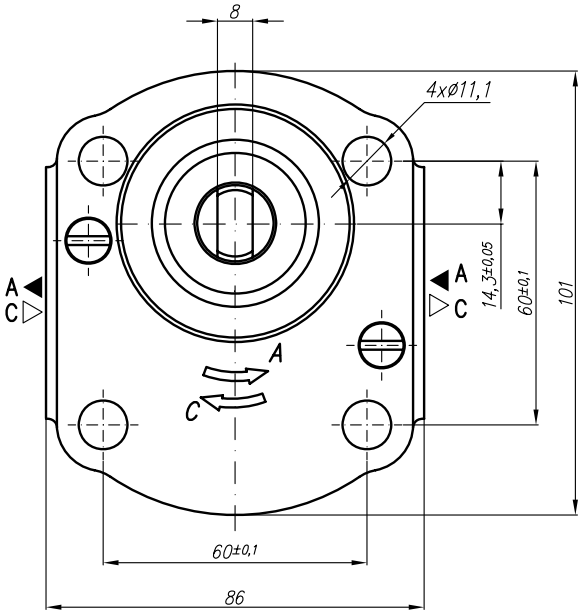

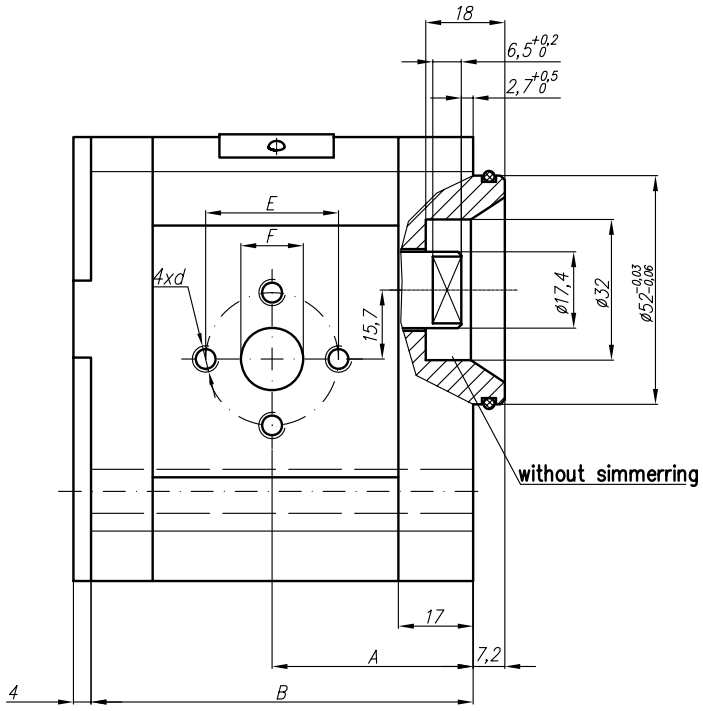

Type	Displacement	Flow		Pressure	max Speed	Dimension							
		at 1500 rpm	at max rpm	P_{nom}	n	A	B	Inlet			Outlet		
	cm^3/rev	l/min	l/min	bar	rpm	mm	mm	E	F	d	E	F	d
20A(C)4,5X381	4,5	6,14	14,33	250	3500	40,5	78	40	15	M6-6H	35	15	M6-6H
20A(C)6,3X381	6,3	8,69	20,29	250	3500								
20A(C)8,2X381	8,2	11,32	26,40	250	3500	45	83,9		20				
20A(C)10X381	10	13,95	32,55	250	3500	45	87						
20A(C)11X381	11,3	15,76	36,78	250	3500								
20A(C)12X381	12	16,92	39,48	250	3500								
20A(C)14X381	14	19,95	46,55	250	3500								
20A(C)15X381	15	21,60	36,00	250	2500								
20A(C)16X381	16	23,04	38,40	250	2500								
20A(C)19X381	19	27,36	45,60	200	2500								
20A(C)22X381	22	31,68	42,24	180	2000								
20A(C)25X381	25	36,00	48,00	160	2000								