Designed as a special version – I section of tandem pump 22A(C)...X380/...X381.

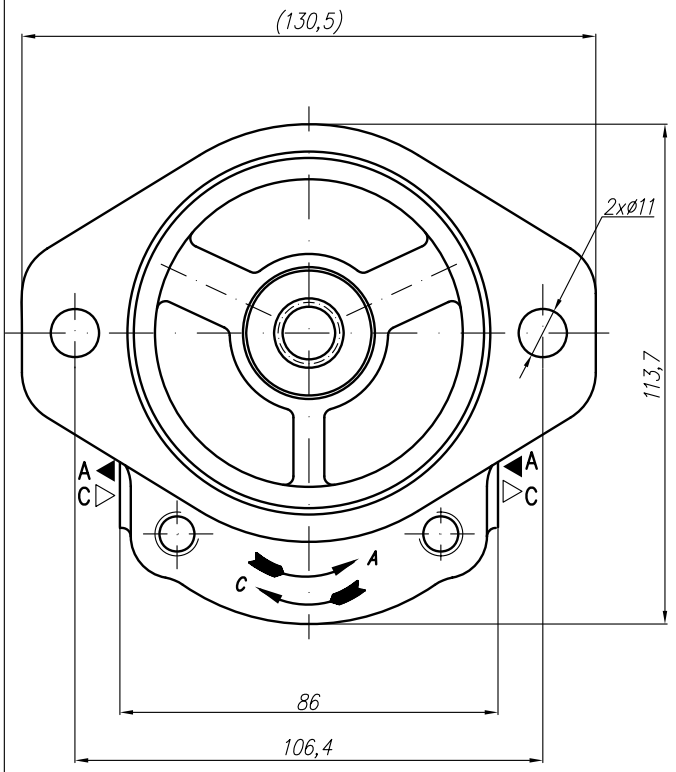

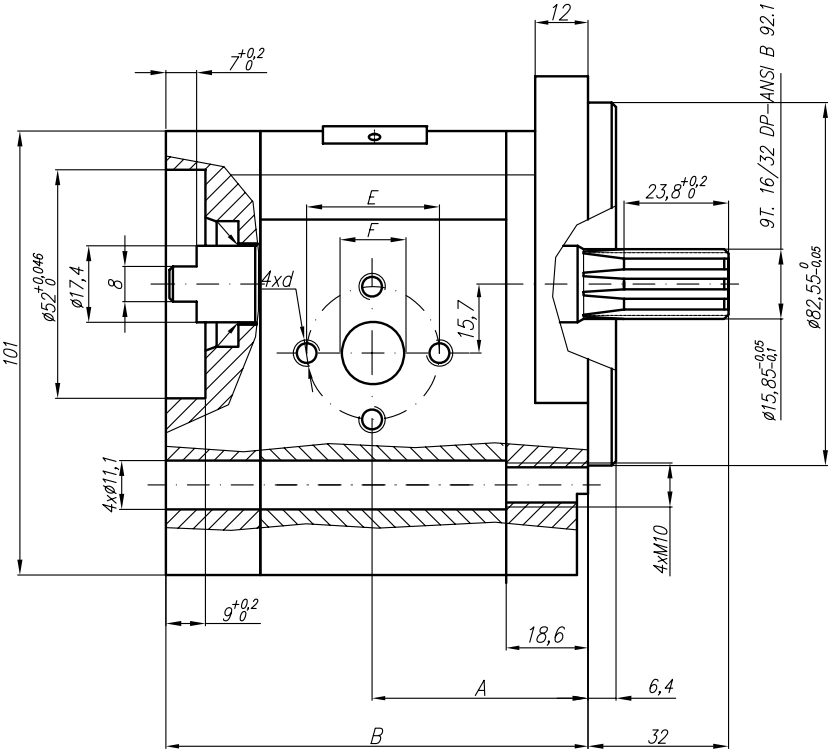

Type	Displacement	Flow		Pressure	max Speed	Dimension							
		at 1500 rpm	at max rpm	P_{nom}	n	A	B	Inlet			Outlet		
	cm^3/rev	l/min	l/min	bar	rpm	mm	mm	E	F	d	E	F	d
20A(C)4,5X380	4,5	6,14	14,33	250	3500			40		M6-6H	35	15	M6-6H
20A(C)6,3X380	6,3	8,69	20,29	250	3500								
20A(C)8,2X380	8,2	11,32	26,40	250	3500	45	85,6		20				
20A(C)10X380	10	13,95	32,55	250	3500								
20A(C)11X380	11,3	15,76	36,78	250	3500	47,6	90,7						
20A(C)12X380	12	16,92	39,48	250	3500								
20A(C)14X380	14	19,95	46,55	250	3500								
20A(C)15X380	15	21,60	36,00	250	2500								
20A(C)16X380	16	23,04	38,40	250	2500	51,6	98,2						
20A(C)19X380	19	27,36	45,60	200	2500								
20A(C)22X380	22	31,68	42,24	180	2000								
20A(C)25X380	25	36,00	48,00	160	2000								