Pump 20A(C)...X411 is equivalent to 20(C)...X352.

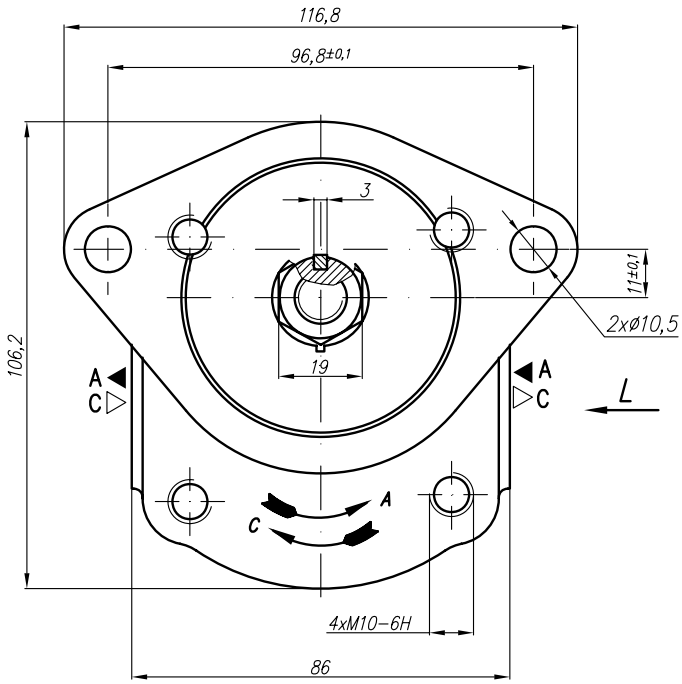

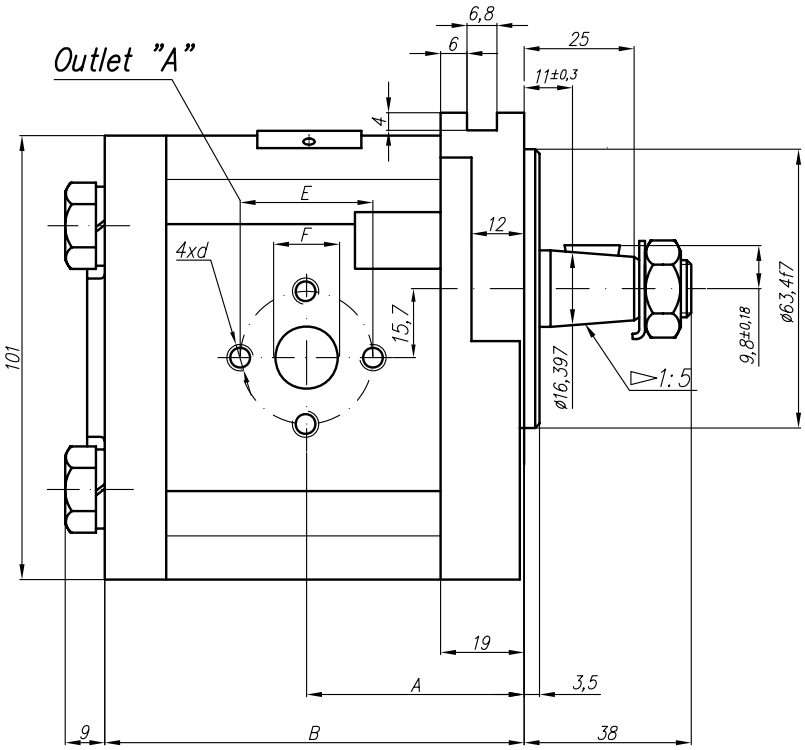

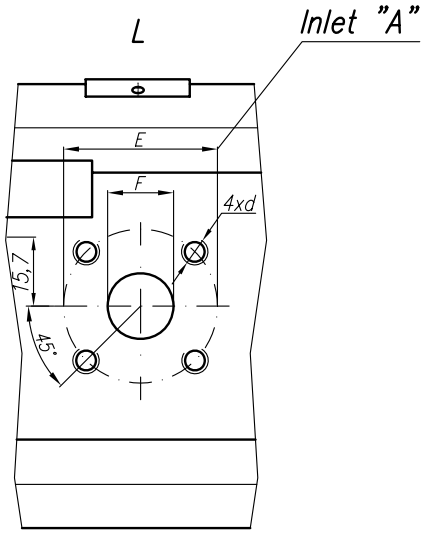

Type	Displacement	Flow		Pressure	max Speed	Dimension							
		at 1500 rpm	at max rpm	P_{nom}	n	A	B	Inlet			Outlet		
	cm^3/rev	l/min	l/min	bar	rpm	mm	mm	E	F	d	E	F	d
20A(C)4,5X352	4,5												
20A(C)6,3X352	6,3												
20A(C)8,2X352	8,2												
20A(C)10X352	10												
20A(C)11X352	11,3												
20A(C)12X352	12												
20A(C)14X352	14	19,95	46,55	250	3500	54	95,4	40	20	M6-6H	30,2	14,2	M6-6H
20A(C)15X352	15												
20A(C)16X352	16												
20A(C)19X352	19												
20A(C)22X352	22												
20A(C)25X352	25												