Designed as a special version – II section of tandem pump 22A(C)...X304/...X305.

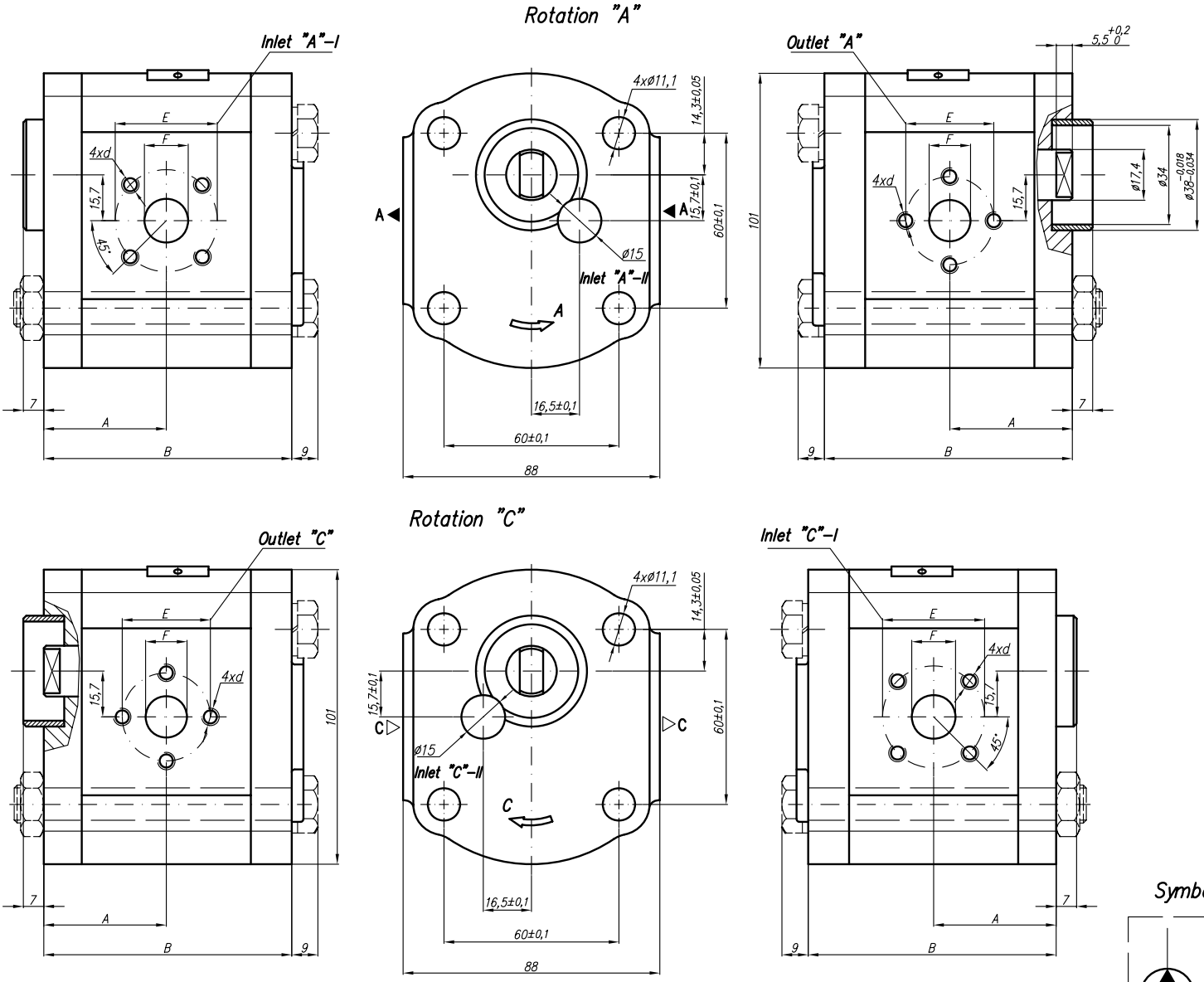

Symbol

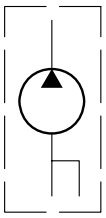

Type	Displacement	Flow		Pressure	max Speed	Dimension							
		at 1500 rpm	at max rpm	P_{nom}	n	A	B	Inlet			Outlet		
	cm^3/rev	l/min	l/min	bar	rpm	mm	mm	E	F	d	E	F	d
20A(C)4,5X305	4,5							40	15	M6-6H	30,2	15	M6-6H
20A(C)6,3X305	6,3												
20A(C)8,2X305	8,2	11,32	26,40	250	3500	34,6	74		20				
20A(C)10X305	10												
20A(C)11X305	11,3												
20A(C)12X305	12												
20A(C)14X305	14												
20A(C)15X305	15												
20A(C)16X305	16												
20A(C)19X305	19												
20A(C)22X305	22												
20A(C)25X305	25												