Designed as a special version – I section of tandem pump 22A(C)...X304/...X305.

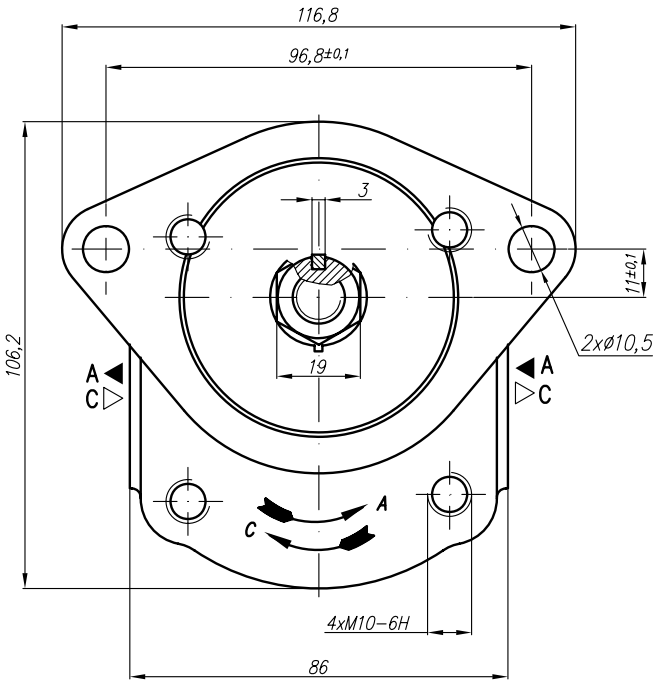

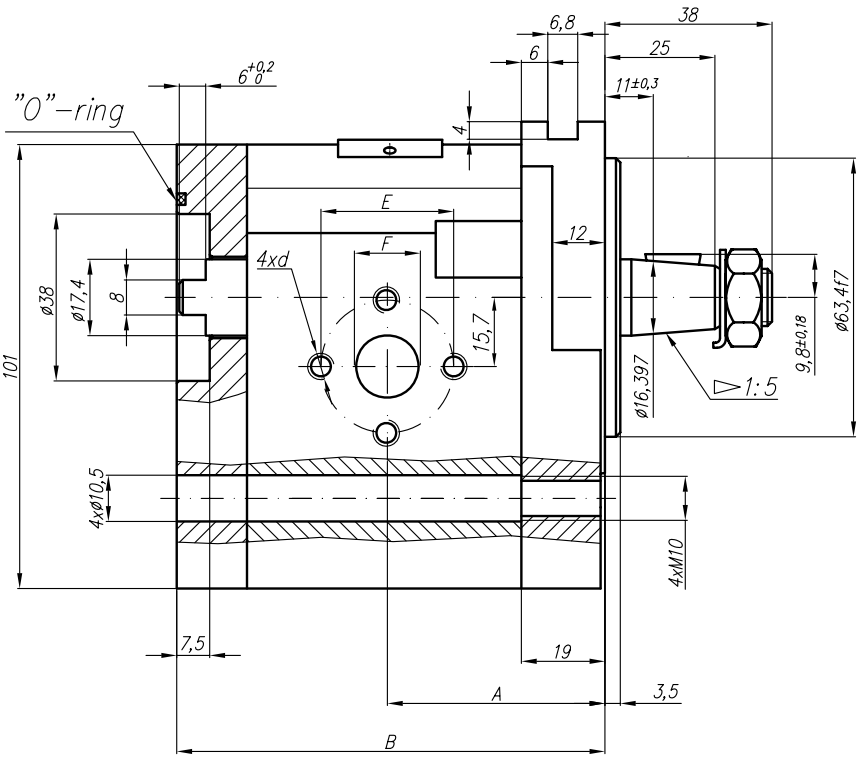

Symbol

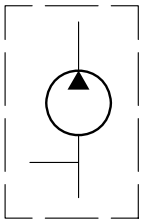

Type	Displacement	Flow		Pressure	max Speed	Dimension							
		at 1500 rpm	at max rpm	P_{nom}	n	A	B	Inlet			Outlet		
	cm^3/rev	l/min	l/min	bar	rpm	mm	mm	E	F	d	E	F	d
20A(C)4,5X304	4,5							30,2	13,1	M6-6H	30,2	13,1	M6-6H
20A(C)6,3X304	6,3												
20A(C)8,2X304	8,2												
20A(C)10X304	10							40	20	M8-6H		15	
20A(C)11X304	11,3												
20A(C)12X304	12												
20A(C)14X304	14	19,95	46,55	250	3500	54	97						
20A(C)15X304	15												
20A(C)16X304	16												
20A(C)19X304	19	27,36	45,60	200	2500	54	105,5						
20A(C)22X304	22												
20A(C)25X304	25												