Designed as a II section of tandem pump 22A(C)...X172/...X173.

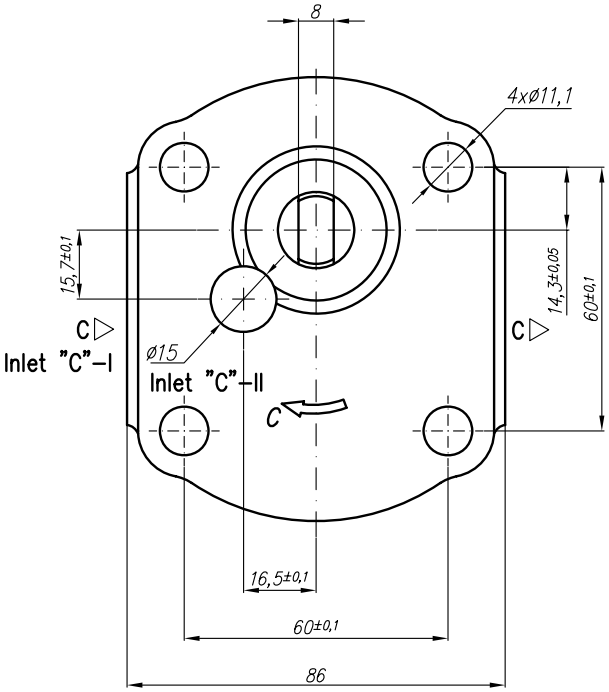

Rotation "C"

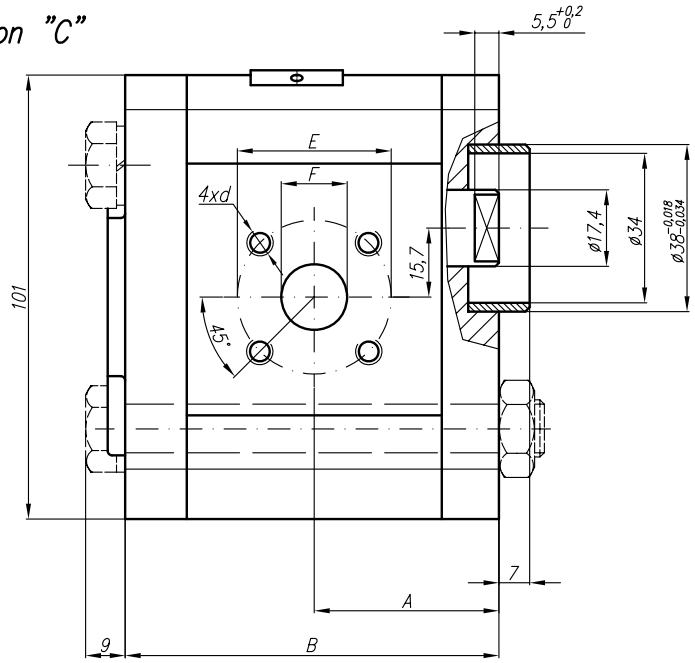

Rotation "A"

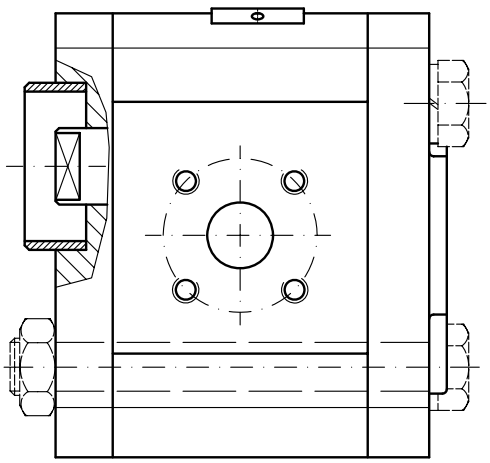

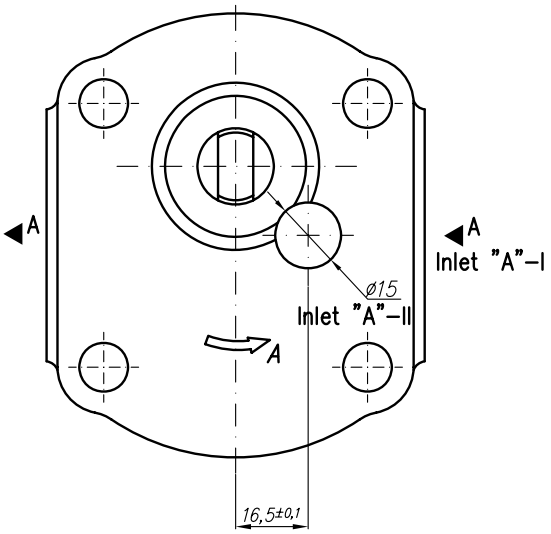

Symbol

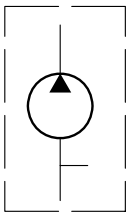

Type	Displacement	Flow		Pressure	max Speed	Dimension							
		at 1500 rpm	at max rpm	P_{nom}	n	A	B	Inlet			Outlet		
	cm^3/rev	l/min	l/min	bar	rpm	mm	mm	E	F	d	E	F	d
20A(C)4,5X173	4,5	6,14	14,33	250	3500			40		M6-6H	35	15	M6-6H
20A(C)6,3X173	6,3	8,69	20,29	250	3500								
20A(C)8,2X173	8,2	11,32	26,40	250	3500	36,6	74		20				
20A(C)10X173	10	13,95	32,55	250	3500								
20A(C)11X173	11,3	15,76	36,78	250	3500	42	85						
20A(C)12X173	12	16,92	39,48	250	3500								
20A(C)14X173	14	19,95	46,55	250	3500								
20A(C)15X173	15	21,60	36,00	250	2500								
20A(C)16X173	16	23,04	38,40	250	2500								
20A(C)19X173	19	27,36	45,60	200	2500								
20A(C)22X173	22	31,68	42,24	180	2000								